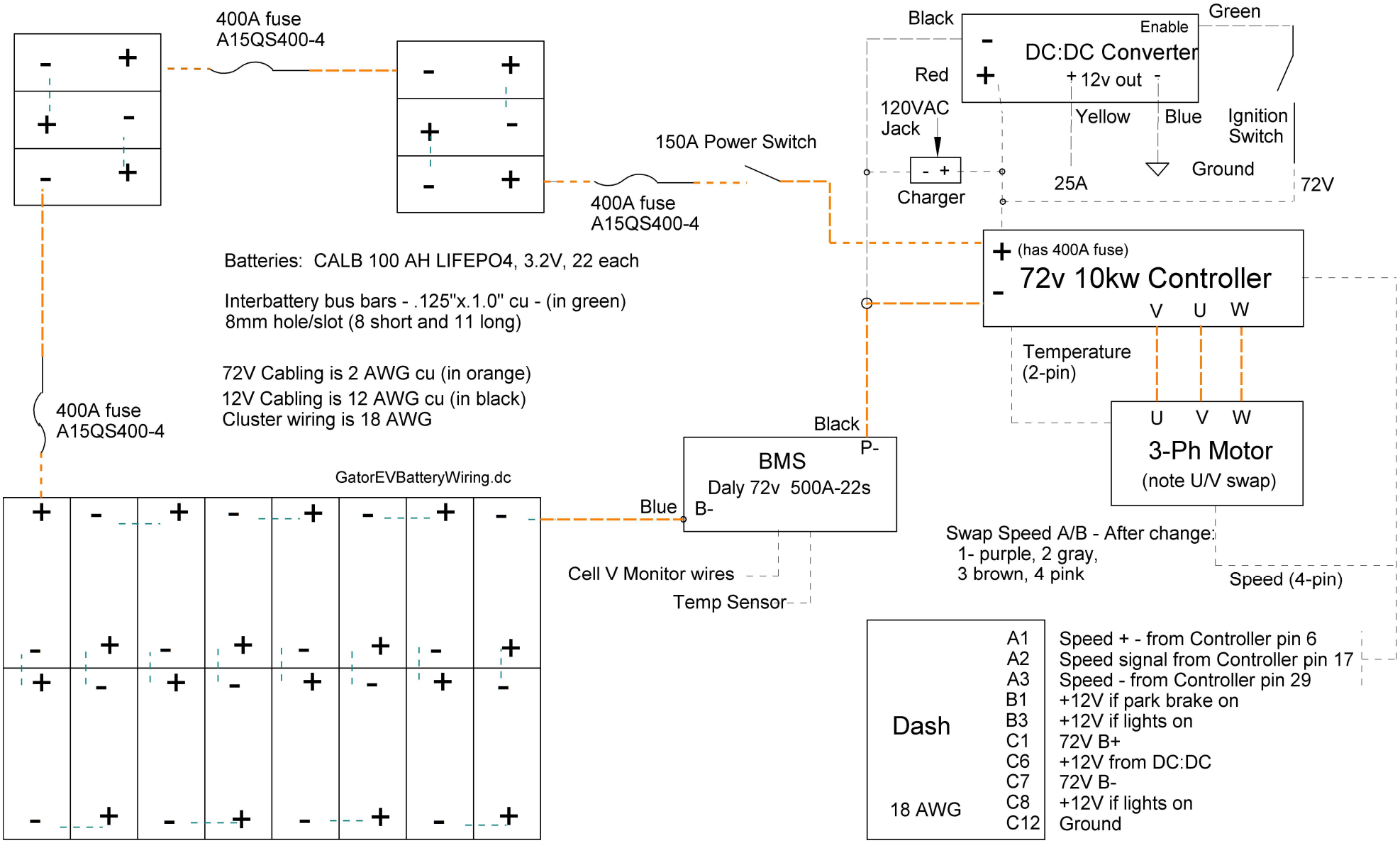

B Laine 12/22

Gator EV Power Wiring Diagram